PRODUCT SPECIFICATION
FOR LCD MODULE

（产品规格书）

Reversion（版本）: 1.0

Module No.（模组型号）:____RV020QVM-300-12___

Customer Name:（客户名）:_____

Project Name:（客户项目名）:_____

This module uses ROHS material

(本产品使用环保材料)

CUSTOMER APPROVED（客户确认）:

☐ Approved Product Specification only. （确认产品规格） ☐ Approved Product Specification and Samples. （确认产品规格及样品）	Approved by（核准）:

Please sign back after confirmed.（确认后请签回）

RJOYTEK DISPLAY LTD:

QA Dept.（品质）	Tech. Dept.（工程）	Sale Dept.(业务)
	章雷	

深圳市荣嘉毅科技有限公司（RJOYTEK DISPLAY LTD）
Tel: (+86) 13510172564
EMAIL: danny@rjyi.net
Web: http://rjoytek.en.alibaba.com
Address: 深圳市宝安区航城大道航城智谷中城未来产业园 7 栋 301 室。

REVISON RECORD

REV	CHANGE DESCRIPTION	DATE
1.0	Original Version	2022-04-23

CONTENTS

PRECAUTIONS IN USE OF LCM ----------4

GENERAL SPECIFICATION ----------4

LCM MODULE DRAWING ----------5

INTERFACE PIN ASSIGNMENT ----------6

BACKLIGHT CHARACTERISTICS ----------7

DC ELECTRICAL CHARACTERISTICS ----------7

Interface Timing Characteristics ----------8

Reset timing ----------9

RELIABILITY ----------10

Inspection requirements ----------11

LCD/LCM judgement standard ----------12

■ PRECAUTIONS IN USE OF LCM

RV020QVM-300-12 is a color active matrix TFT-LCD Panel using amorphous silicon TFT's (Thin Film Transistors) as an active switching devices. This model is composed of a TFT-LCD Panel, a driving circuit and a back light system. It is a transmissive type display operating in the normal white. This TFT-LCD has a 2.0 inch diagonally measured active area with WVGA resolutions (320 horizontal by 240 vertical pixel array). Each pixel is divided into Red, Green, Blue dots which are arranged in vertical stripe and this panel can display 16.7M colors.

■ GENERAL SPECIFICATION

Item	Contents	Unit
LCD Type	AM TFT ,TRANSMISSIVE, NEGATIVE	
Display Format	320(R,G,B)*240	Dots
Input Data	SPII	\
View Angle	ALL O”clock	\
IC Driver	ILI9342	\
Display Colors	16.7 M	\
Module Size	46.1(W)×40.96(L)×2.53(T)	mm
Active Area	40.8(W) ×30.6(L)	mm
Pixel Size	0.0975x0.0975	mm
Operating Temperature	-20 to +60	℃
Storage Temperature	-30 to +70	℃
LCM Luminance	300	cd/m²
Weight	TBD	g

LCM MODULE DRAWING

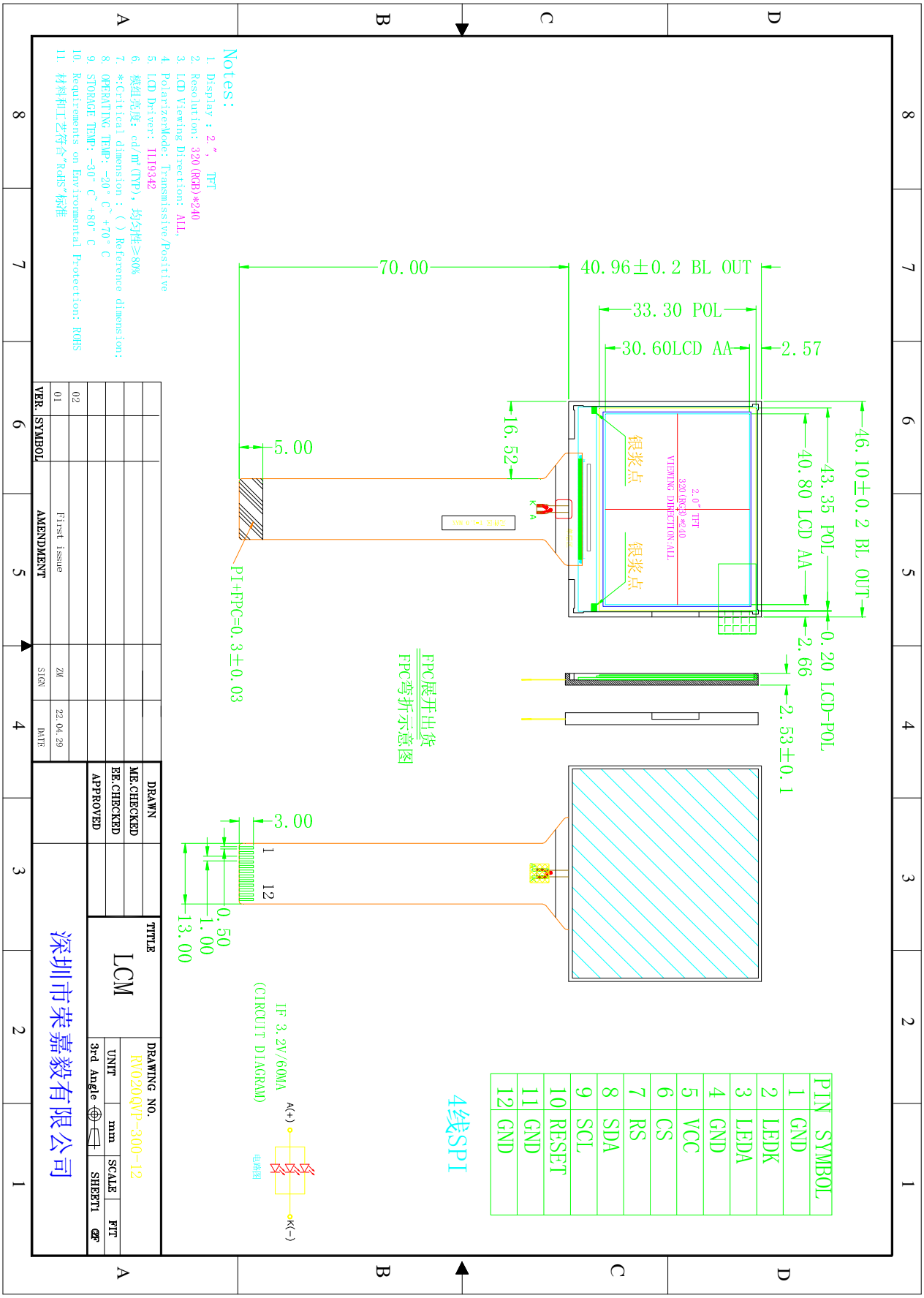

■ INTERFACE PIN ASSIGNMENT

Pin No.	Symbol	Function description	When not in use
1	GND	Ground	
2	LED-K	B/L negative pin	
3	LED-A	B/L positive pin	
4	GND	Ground	
5	VCV	Power ground(2.8V)	
6	CS	Chip select	
7	RS		
8	SDA	Serial data input pin in serial bus system interface	
9	SCL	Pixel clock signal input pin	
10	RESET	Reset signal(low active)	
11	GND	Ground	
12	GND	Ground	

■ BACKLIGHT CHARACTERISTICS

Item	Symbol	Min.	Typ.	Max.	Unit	Condition
Forward voltage	Vf	--	**9**	--	V	
Forward Current	IF	--	20	--	mA	
Number of LED	-	3X1			Piece	-
Connection mode	S/P	3Serial/1Parallel			-	-

■ DC ELECTRICAL CHARACTERISTICS

Item	Symbol	Min.	Typ.	Max.	Unit
Power supply for logic	IOVCC	1.65	1.8/2.8	3.3	V
Input power supply	VCC/VCI	2.5	2.8	3.3	V
Input current	I_{IN}	-	TBD	TBD	mA
Input high voltage	V_{IH}	0.7IOVCC	-	IOVCC	V
Input low voltage	V_{IL}	0	-	0.3IOVCC	V
Output high voltage	V_{OH}	0.8IOVCC	-	IOVCC	V
Output low voltage	V_{OL}	0	-	0.2IOVCC	V

INTERFACE TIMING
System Bus Read/Write Characteristics.

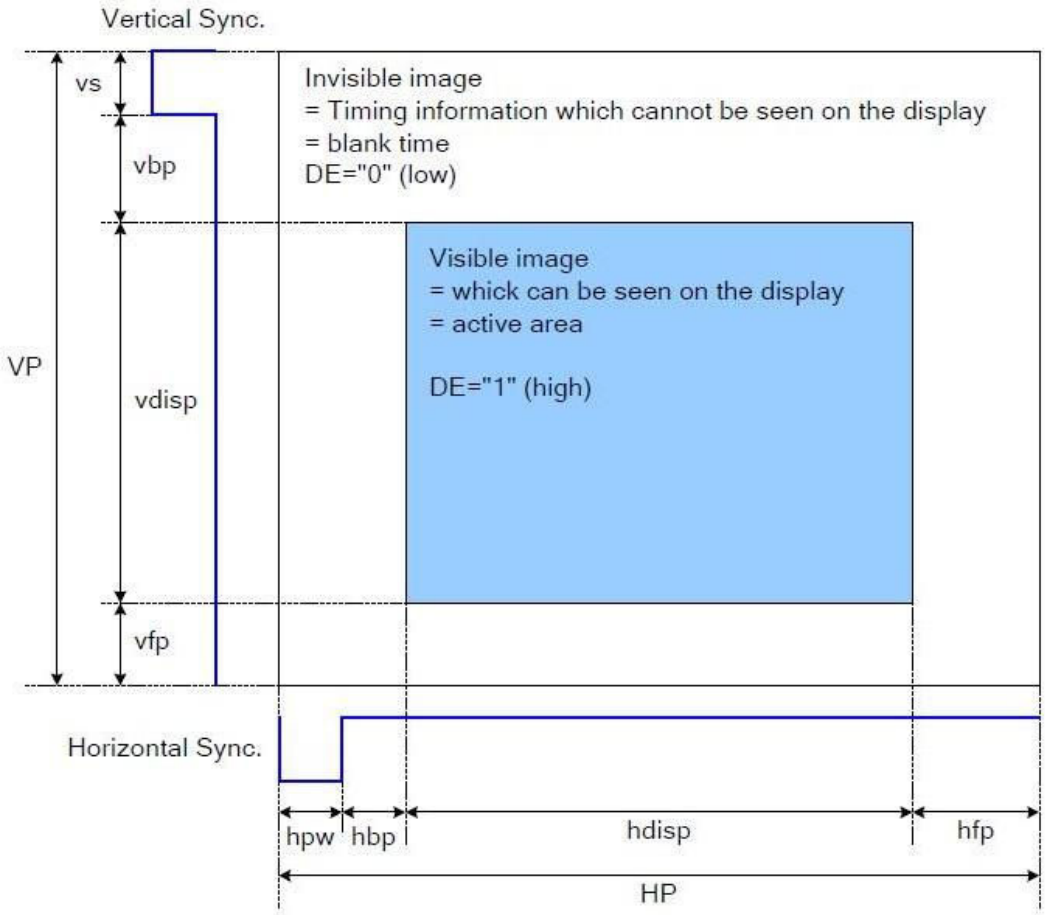

Please refer to the following table for the setting limitation of RGB interface signals.

Parameter	Symbol	Min.	Typ.	Max.	Unit
Horizontal Sync. Width	hpw	1	-	255	Clock
Horizontal Sync. Back Porch	hbp	1	--	255	Clock
Horizontal Sync. Front Porch	hfp	1	--	-	Clock
Vertical Sync. Width	vs	1	--	254	Line
Vertical Sync. Back Porch	vbp	1	--	254	Line
Vertical Sync. Front Porch	vfp	2	--	--	Line

Note:

1. Typical value are related to the setting frame rate is 60Hz.

Power on/off sequence

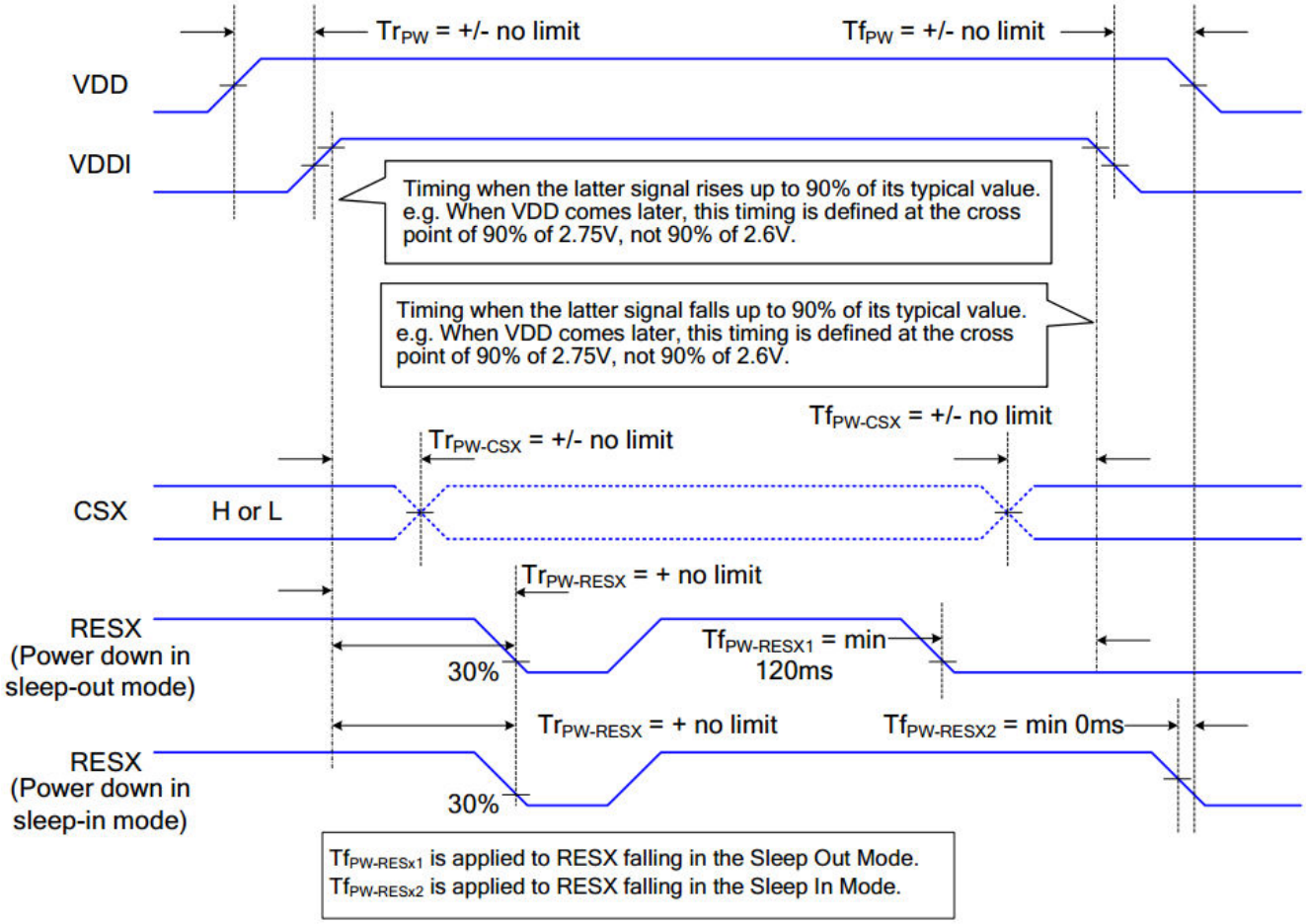

Optical Specification

Item		Symbol		Condition	Min	Typ	Max	Unit	Note
Transmittance (w/o polarizer)		T%		e=o° Ta=25°C	-	4.0	-	%	1
Contrast ratio		Cr				1000	-	-	3
Response time		Ton+Toff			-	30	40	ms	4
Surface Luminance		LV			-	300	-	cd/m^2	2
Viewing angle range		Left	θ_L	Center CR>10	75	80	-	deg	5
		Right	θ_R		75	80	-	deg	
		Top	θ_T		75	80	-	deg	
		Bottom	θ_B		75	80	-	deg	
CIE(x,y) chromaticity	Red	x		Viewing normal angle 0x=0y=O° Ta=25°C	-	-	-	-	6
		y			-	-	-	-	
	Green	x			-	-	-	-	
		y			-	-	-	-	
	Blue	x			-	-	-	-	
		y			-	-	-	-	
	White	x			-	-	-	-	
		y			-	-	-	-	

Note1:Definitionofopticalmeasurementsystem.Theopticalcharacteristicsshouldbemeasuredindarkroom.After5minutesoperation,theopticalpropertiesaremeasuredatthecenterpointoftheLCDscreen.AllinputterminalsLCD panelmustbegroundwhenmeasuringthecenterareaofthepanel.

■ RELIABILITY

Item	Conditions	Criteria
High temperature operation	60℃ for 48 hours	● No defect in cosmetic and Operational functions. ● Total current consumption Below double of initial value.
Low temperature operation	-20℃ for 48 hours	
High humidity storage	60℃.90% RH for 48 hours	
High Temperature storage	70℃ for 48 hours	
Low temperature storage	-30℃ for 48 hours	
Temperature cycling	-20℃ (30min) ↓ ↑ -25℃ (5min) ↓ ↑ 70℃ (30min)	

Inspection requirements

Acctptancee Quality Limit (AQL) GB/T 2828.1-2012 Level II

Serious defect： C=0 Major defect： 0.4 Minor defect: 1.0

The following defects are the major defects of the product：

1: Functional and appearance defects affect normal use

2: Performance parameters exceed specification standards

3: Missing components, accessories and main identification

4: More irrelevant signs and other items that may affect the performance of the product

Minor defect： Outside of the major defect is minor defect

Inspection Conditions：

6.21The lighting of appearance inspection and function inspection shall meet the requirements specified in the light intensity test (Function: 200 ± 201ux, Appearance: 1000 ± 2001ux)

6.22Finished products and semi-finished products shall be tested by the customer mainboard or the test fixture that can meet the customer's requirements. Standard backlight shall be used for the single-screen test.

6.23Inspection method: eye distance: 30±5cm;Take the product normal line as the center to check the upper and lower 45° range.

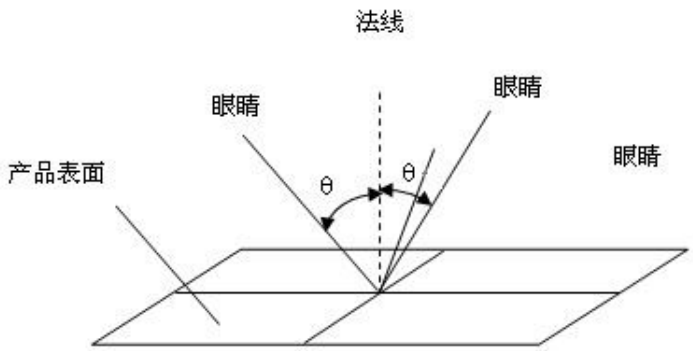

视角定义图

Definition of the Area

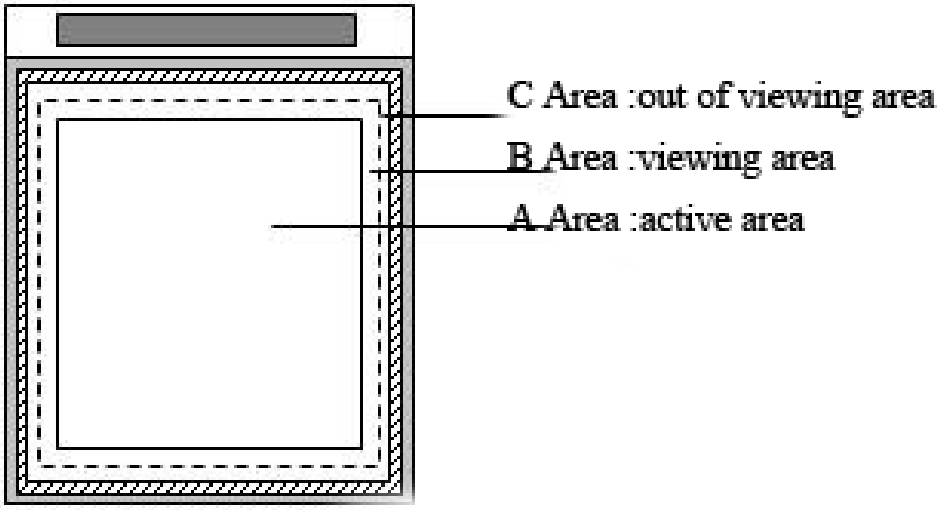

View area definition diagram

When testing, please wear a rope static ring and anti-static finger sleeve (or gloves)

Need to determine the specification of defects (such as dots and lines) with a film card, magnifying eyepiece for coverage inspection (products with special requirements of customers shall be implemented according to customer requirements), Or use test equipment to test the exact value;Other defects are determined according to the limit sample.

LCD/LCM judgement standard

(the unit of the following design size standard is mm without special specification)

Point/line definition

Dot size (①):when the long diameter of more than 2.5 times short diameter, dot defect into a line defect judgement)

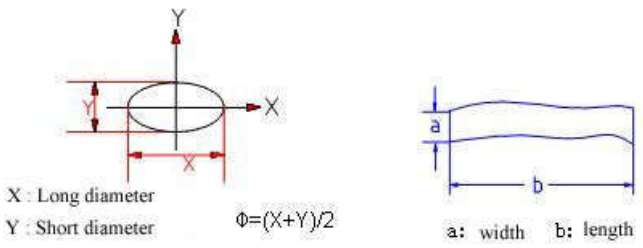

Appearance acceptance standard and defect judgement

The judgement standard forjudging the defect dot and line of full fit module (display and touch screen)

Spot defect (white spot, foreign body, impurity, color point, bump point, etc.)			
DOT	Inspection Criteria	Defect distinguish	remake
G<0.1mm	Not counted	Major	10mm* 10mm range allow 5
0.1<C)<0.2mm	2		The distance between the two defects is greater than 10
0.2<C)<0.3mm	1		
0.3mm<®	0		
Additional: pitting/poor gathering points apply to limited samples or by ND5%			

Pixel dot (bright color dott, dark dot)				
Bright > color dot	dot	N<2	Major	Total NW3
Dark dot	dot	N< 2 z DS > 10mm		
	2s	N< 1		
	3s	N< 0		
Additional: Partial Bright Dot are judged by ND5%.				

Linear defects (scratch and other physical damage;White thread, fiber, dander, etc.)				
Details		Inspection Criteria	Defect distinguish	remake
length (L)	width (W)			
L<1.5mm	W<0.03mm	Not counted		Not allowed gathered
L<3.0mm	0.03<W<0.08mm	2		The distance between the two defects is greater than 10mm
L>3.0mm	W>0.08mm	0		

CG defect appearance and judgement criteria

Spot defects for Ink Zone or visible area (white spot, foreign body, impurity, bump point, etc.)			
DOT	Inspection Criteria	Defect distinguish	remake
	Not counted	minor	
0.1<C)<0.2mm	2		The distance between the two defects is greater than 10
0.2mm<®	0		

Linear defects fbr Ink Zone or visible area (scratch and other physical damage;White thread, fiber, dander, etc.)				
Details		Inspection Criteria	Defect distinguish	remake
length (L)	width (W)			
Ignore	W<0.03mm	Ignore	minor	Not allowed gathered
L<3.0mm	0.03<W<0.05mm	2		The distance between the two defects is greater than 10mm
L>3.0mm	W>0.05mm	0		

Ink defects for Ink Zone		
Inspection item	Judge criterion	Defect distinguish
Ink area light transmissionjeakage	According to the spot defect.	minor
Ink sawtooth in VA area	The sawtooth size: W W 0.20mm no count	minor
Ink color difference	No difference from the front sight or upper and lower limit	minor
Silk screen graphic	Misprints, mixed printing reprints, and defects are not	minor
ink burr in VA area	LW0.05mm, WW 0.05mm.Number^ 10	minor
Comer broken	the surface： not allowed； the back: tW1/2, 0.1 v ① W 0.2mm, NW3.	minor

Functional defect criteria

Num.	Inspection content	Inspection Criteria	Inspection tools/equipment	Defect distinguish
1	No display	Not allowed	Visual, test jig, power supply	major
2	Display abnormal	Not allowed	Visual, test jig, power supply	major
3	missing segment	Not allowed	Visual, test jig, power supply	major
4	Different chroma or brightness	Not allowed, reference limit template fbr special cases	Visual, test jig, power supply	major
5	The display image is different from the sample	Not allowed	Visual, test jig, power supply	major
6	Backlight LED don't work	Not allowed	Visual, test jig, power supply	major
7	Backlight flashing	Not allowed	Visual, test jig, power supply	major
8	Leakage liquid crystal	Not allowed	Visual	major

Note: 1. Other parts not involved shall be subject to the customer's requirements or limits.

2. The allowable proportion of defective materials in each batch shall not exceed 5%.

After the product is launched on the client, the appearance problems are all the responsibility of the client, and the functional problems are the responsibility of RJOYTEK DISPLAY LTD